Tech Guide

JEEP JL/JT WRANGLER/GLADIATOR 3.6L PENTASTAR TVS1900 SUPERCHARGER

Harrop Engineering develops and manufactures premium supercharger kits for customers globally. Since 1955 Harrop have successfully designed and manufactured components for OEM's, Motorsport Teams, Car Builders and Enthusiasts. Harrop Engineering Australia and USA is certified to ISO 9001 standards with superior quality, performance and vehicle integration the foundation of Harrop Performance Products.

14/10/2026

Key Features

- Increase power by up to 64%
- Increase torque by up to 59%
- 85mm supercharger pulley achieves peak boost of ~60 kPa
- High efficiency TVS1900 supercharger technology
- Integrated supercharger bypass relieves boost under light load conditions, reducing drive loss and improving fuel economy
- Inverted supercharger design
- Dual pass high-capacity water to air intercooler
- Mopar 2 Bar MAP sensor
- 22mm water in / out intercooler lines
- Front mounted low temperature radiator
- Replacement high flow DW550 injectors
- High flow brushless Bosch intercooler pump
- 6PK supercharger drive from OEM belt path
- Retains OEM accessories, air intake and throttle body
- No other vehicle modification required
- Port available to connect boost gauge
- Kit currently only suits right hand drive vehicles
- Part number 99-KSM84K60

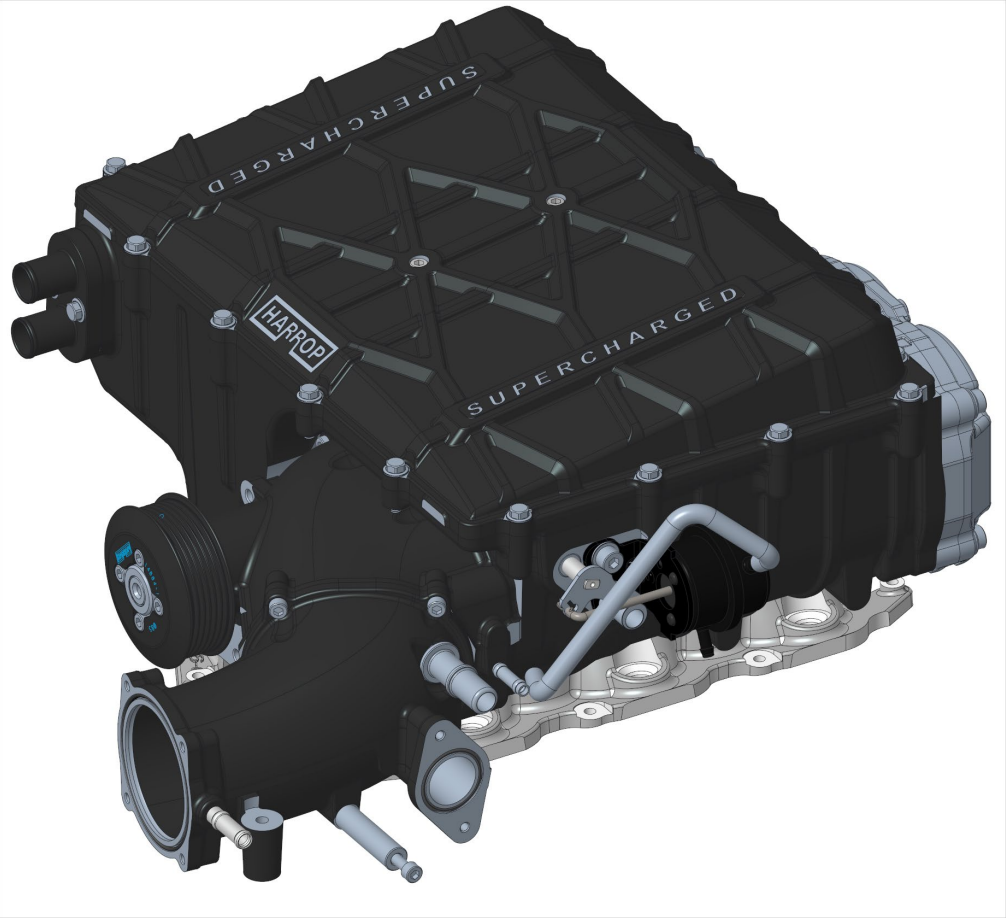

Assembly layout and intercooler dimensions

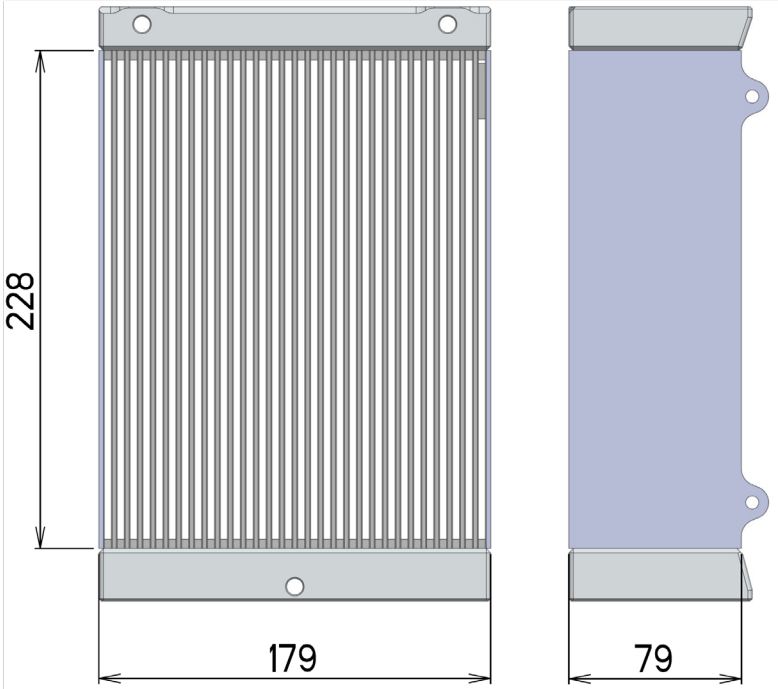

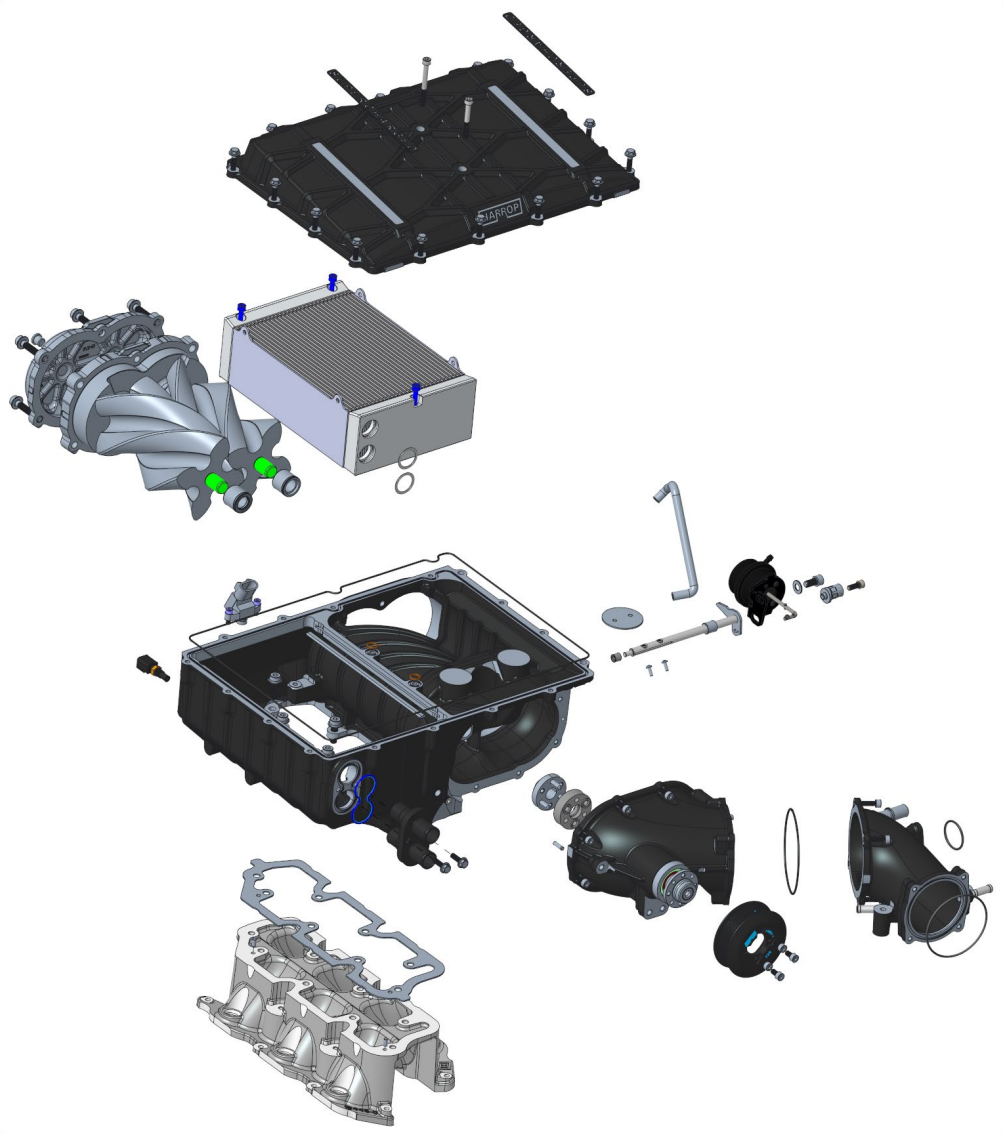

Performance

Vehicle	Peak power	Peak torque	SC Pulley & Peak boost
Naturally aspirated Jeep JT Gladiator with 3.6L Pentastar V6	153 kW (205 hp)	268 Nm (198 lb ft)	NA
Harrop Supercharged Jeep JT Gladiator with 3.6L Pentastar V6	251 kW (337 hp) +64%	427 Nm (315 lb ft) +59%	85mm ~62 kPa (9 PSI)

Measured on the Harrop Mainline ProHub dynamometer on 93 AKI/98 RON fuel at 22°C ambient temp
Visit HarropTV to watch the Harrop Supercharged Jeep Gladiator - https://youtu.be/lRVBB84Nnwg
Performance results will vary subject to variable factors such as weather, dyno type, fuel quality, engine and vehicle condition and configuration.